Machine overview

PERS

Chemistry and machine solutions

Turbo-Line
S- Serie

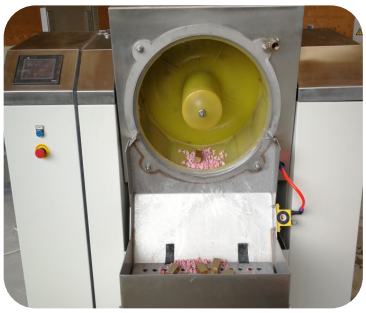

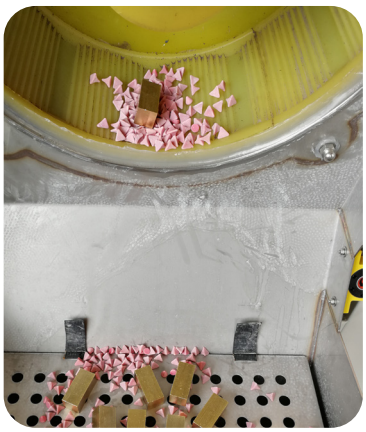

General process description:

When the process starts, water and process water must be added to the bowl. Sanding dust and workpiece waste will, together with the process water pass through the gap and continuing back to the sump.
A level sensor is mounted here, which controls the diaphragm/submersible pump. The water will subsequently normally be led to process treatment plants, where the sludge part will be retained. The water is recycled again. Alternatively, water incl. compound is discharged directly to sewer.

Before the process bowl is tilted, it-must be emptied of process water. This is done by opening the ball valve under the bowl so that the process water runs down into the sump.
When discharging, the process bowl tips 125 degrees. This causes both chips and the remaining process water to come out.
On the 140S model, the discharging of the process water isn't necessary. The discharge box is then raised approx. 30 degrees return to a user-friendly working height. In this way, the discharge box is placed at an ergonomic working / operating height for the staff.

When changing media in the S-version, an insert is usually used which is placed in the discharge box. The medium can then be easily and simply removed or replaced.
Control of the machine's functions takes place on a 5" colour touch screen. Here, rotation speed and process time are controlled as the most important parameters. All functions that are connected can also be operated manually. It is also possible to choose different languages.

The process around the Turbo-Line model is prepared with, Electric powered submersible pump for removal of consumed process water incl. sludge, connection of water supply and bottom drainage.

Model	Capacity (L)	Bowl Diameter (mm)	Measurement L x W x H (mm)	Engine (kW)	Speed (RPM)	PU Coating (mm)	Total weight (kg)
Turbo-Line 60S	60/30	475	1,390 x 700 x 1,240	1.5	0-180	22	400
Turbo-Line 100S	100/45	550	1,100 x 740 x 1,200	2.2	0-170	25	500
Turbo-Line 140S	140/65	660	1,700 x 1,300 x 1,140	4.0	0-160	26	700

Turbo-Line
B- Serien

Model	Capacity (L)	Bowl Diameter (mm)	Measurement L x W x H (mm)	Engine (kW)	Speed (RPM)	PU Coating (mm)	Total weight (kg)
Turbo-Line 60B	60/30	475	1,390 x 700 x 1,240	1.5	0-180	22	400
Turbo-Line 100B	100/45	550	1,100 x 740 x 1,200	2.2	0-170	25	500
Turbo-Line 140B	140/65	660	1,700 x 1,300 x 1,140	4.0	0-160	26	700

Turbo-Line
Manuel afgratningsanlæg

Turbo-line 120

General process description:

The manual Turbo-Line machine is a completely manually operated "stand-alone" unit.
The bowl has straight vertical sides and a separate bottom that spins around at a given and individually adjustable speed between 50 and 180 rpm. (Normal speed is between: 115 to 135 rpm.)

When the Turbo-Line machine is running, the chips inside the bowl itself make a pattern that looks like a sausage spinning around its own shaft.
Everywhere inside the bowl itself, parts are coated with an approx. 22 - 30 mm. yellow PU (Polyurethane) coating.
The bowl itself can handle up to approx. 50-100 L. items / products per. batch, depending on the machine size, the shape of the items/products themselves. The actual time and speed settings are entered on the built-in touch screen.

When the machine starts the process water will be automatically supplied and at the same time the dosing pump will take care of adding the pre-set compound amount (%).

The installation of respectively the solenoid valve and dosing pump will be built in by Pers Group upon delivery.

Model	Capacity (L)	Bowl Diameter (mm)	Measurement L x W x H (mm)	Engine (kW)	Speed (RPM)	PU Coating (mm)	Total Weight (kg)
Turbo-Line 50A	50	460	1,390 x 700 x 1,240	1.5	50-180	22	400
Turbo-Line 50	50	460	1,000 x 660 x 1,120	2.2	50-180	25	300
Turbo-Line 120	120	640	1,740 x 900 x 1,470	4.0	50-160	26	500
Turbo-Line 230 Gulv	230	800	1,620 x 1,008 x 1,135	7.5	0-140	30	1,100

Turbo-Line
Semi automatisc Turbodeburring with discharge

Turbo-Line 120B

Turbo-Line 80B

General process description:

When the process starts the process water will be added to the bowl. Sanding dust and workpiece excess material in the process water will continuously return to the sump, via the gap between the bottom disc and the ring. In the sump a submersible pump is mounted, which automatically will pump the water compound to a conical PE tank, where the sludge will fall to the bottom of the cone in the PE tank. The process water to be recycled will be taken out above the middle of the PE tank to ensure using the cleanest process water.

Control of the machine's functions takes place on a 5" colour touch screen. Here, rotation speed and process time are controlled as the most important parameters. All functions that are connected can also be operated manually. It is also possible to choose different languages.
The process around the Turbo-Line is prepared with:

- Air-operated diaphragm pump for removal of consumed process water incl. slam
- Connection of water supply
- Bottom drain

Model	Capacity (L)	Bowl Diameter (mm)	Measurement L x W x H (mm)	Engine (kW)	Speed (RPM)	PU Coating (mm)	Total Weight (kg)
Turbo-Line 50B	50/25	460	1,390 x 700 x 1,240	1,5	0-180	22	400
Turbo-Line 80B	80/40	460	1,100 x 660 x 1,120	2,2	0-170	25	500
Turbo-Line 120B	120/50	640	1,700 x 1,300 x 1,400	4,0	0-160	26	700
Turbo-Line 230B	230/120	800	1,450 x 1,700 x 2,000	7,5	0-140	30	1,400

Turbo-Line
Semi automatic turbo

Turbo-Line 120S

Turbo-Line 80SU

General process description:

When the process starts, water will be added to the bowl. Sanding dust and workpiece waste will together with the process water continuously run through the gap (between the bottom disc and the ring) and return to the sump. Here, a submersible pump is mounted, which will subsequently automatically pump the process water on to a conical PE tank, where the sludge will fall to the bottom of the cone on the PE tank.
The process water to be recycled will be taken out above the middle of the PE tank to ensure using the cleanest process water.

Control of the machine's functions takes place on a 5" colour touch screen. Here, rotation speed and process time are controlled as the most important parameters. All functions that are connected can also be operated manually. It is also possible to choose different languages.
The process around the Turbo-Line is prepared with:

- Air-operated diaphragm pump or an electric-operated submersible pump for removal of consumed process water incl. sludge
- Connection of water supply
- Bottom drain

Model	Capacity (L)	Bowl Diameter (mm)	Measurement L x W x H (mm)	Engine (kW)	Speed (RPM)	PU Coating (mm)	Total Weight (kg)
Turbo-Line 50S	50/35	460	1,390 x 700 x 1,600	1.5	0-180	22	400
Turbo-Line 80S	80/50	460	1,100 x 740 x 1,800	2.2	0-170	25	500
Turbo-Line 120S	120/75	640	1,700 x 1,300 x 2,200	4.0	0-160	26	700
Turbo-Line 230S	230/130	800	2,450 x 1,700 x 2,900	7.5	0-140	30	1,400

Turbo-Line
Fully automatic deburring machine with discharge

Turbo-Line120Q

General process description:

When the process starts, items and chips in the bottom of the elevator is hydraulically lifted into the bowl of the Turbo-Line machine and simultaneously the Turbo-Line bowl is started and the pump for the adding the process water will also automatically be activated.
The elevator tips the contents into the turbo which before it's being returned to its starting position is being rinses for remaining chips & compound (option). The turbo continues the process time out after which it discharges all contents into the antechamber. Before returning, the bowl itself is rinsed to ensure that all media and items have run down into the antechamber.

The adjustable discharge flap (on the Turbo-Line 120Q in-line) is hydraulic adjustable enabling you to control a calm flow of material and process water flowing through the gab onto the separation table. When the parts and media are on the perforated plate the chips & compound falls through the screen and over the conveyor belt back to the elevator. The parts continue out of the machine, where a maize dryer can be directly placed. As on option a washing station on can be mounted on the separation table to clean the parts. This washing station will help with removing any abrasive residues and soap from the compound from the workpiece surfaces.

The process water which is coming from the process bowl will send grinding material and workpiece waste together with the liquid through the gap, and return to the buffer tank. A submersible pump is mounted here, which will subsequently automatically pump the process water to a conical PE tank, where the sludge will fall to the bottom of the cone.
The process water to be recycled will be taken out above the middle of the PE tank to ensure using the cleanest process water.
The sludge can be removed from a 2" valve mounted on the bottom of the cone as required.

Control of the machine's functions takes place on a 10" colour touch screen, which is built into a control cabinet, in which a PLC and frequency converter are mounted. On the Turbo-Line 120Q in-line all functions can be set, controlled and saved as recipes.
All functions can also be manually run from the panel.

The process around the turbocharger is prepared with:

- Submersible drainage sump pump for consuming process water incl. sludge
- Connection of water supply
- Bottom drain
- Flushing system of elevator and turbo engine

Turbo-Line
Fully automatic deburring machine with discharge

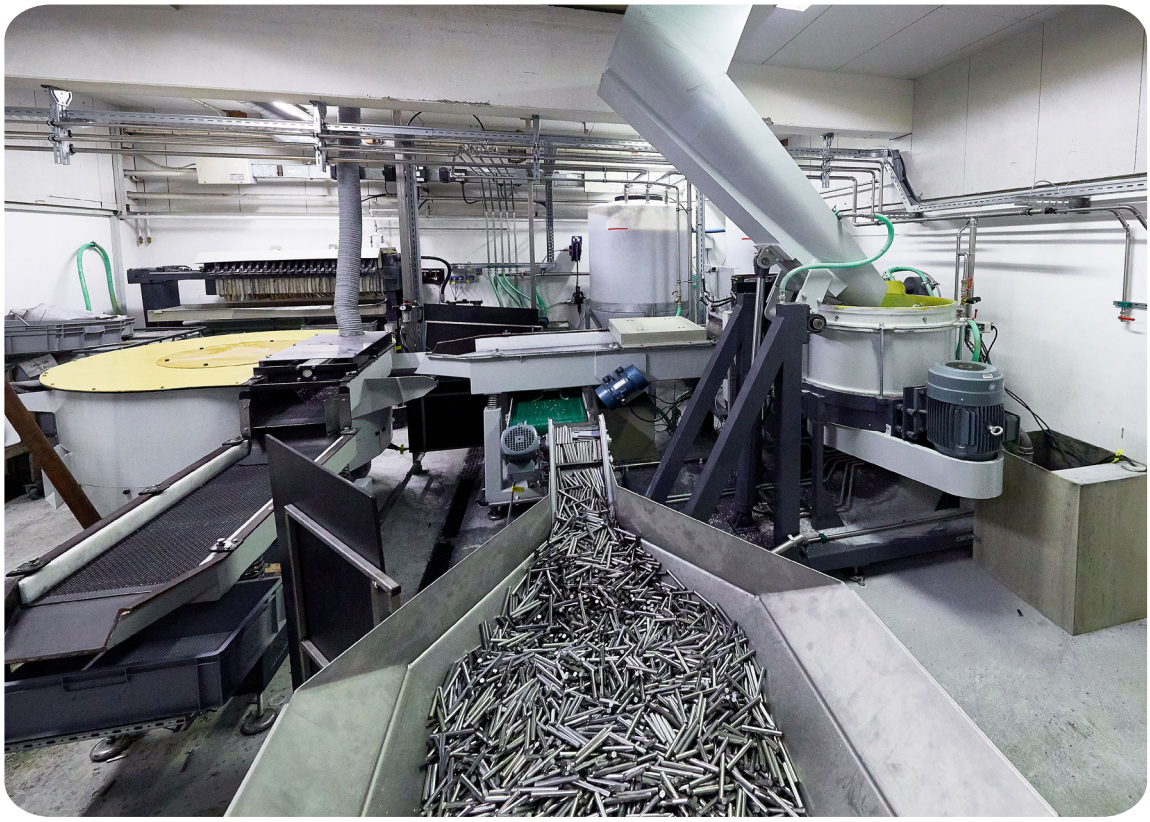

The "Q in-line" version has following features which does not come on the normal "Q" version which can be controlled from the control cabinet:

- Hydraulically adjustable opening/closing of the gap on the exit box
- Can be programmed up to 20 different recipes
- Adjustable controlling of the vibration speed of vibration table on the exit table
- Adjustable controlling of the vibration speed of vibration table on the separation table
- Control the on/off timing of the water system installed to empty the elevator
- External service & maintenance supervision via a Tosibox
- Control an automatic feeding system if such a unit is installed
- Control the flow and the time parts are to be filled into the elevator from an automatic feeding system if such a unit is installed

Model	Capacity (L)	Bowl Diameter (mm)	Measurement L x W x H (mm)	Engine (kW)	Speed (RPM)	PU Coating (mm)	Total Weight (kg)
Turbo-Line 120Q	120	640	2,060 x1,700 x 1,200	4.0	0-160	22	1,100
Turbo-Line 230Q	230	800	3,200 x 2,740 x 1,800	7.5	0-140	25	1,800
Turbo-Line 240Q	240	800	3,650 x 2,200 x 1,300	4.0x2	0-160	26	1,800
Turbo-Line 460Q	460	800	4,500 x 3,340 x 1,800	7.5x2	0-140	30	3,300

Turbo-Line
High Precision
Get Robot handling on our machines

General process des

The process is carried out in an open drum/bowl, where the bottom runs around and the ring (side wall) itself is static.
In the middle of the gap between the bottom disc and the ceramic ring (both made of hard PU), a ceramic ring is mounted on the casing itself, means that the gap during operation is as low as 0.1 mm. This means that the machine is extremely suitable for polishing e.g. jewellery and very thin items/parts. The machine is delivered with a pre-installed dosing pump.

The contact between the product itself and the selected chips generates a very intense deburring/polishing of the products themselves, which means that the polishing time is reduced by up to 20 times, compared to what can be achieved on a traditional round vibration machine.
Via the built-in standard control over a frequency converter, the speed steplessly can be varied between 50 and 180 rpm.

Model	Capacity (L)	Width (mm)	Depth (mm)	Height (mm)	Motor (kW/V)	Gap opening (mm)	Totalweight (kg)
Turbo-Line 50G	50	102	860	1,600	2.3/380	0.1-2.0	180

PERS

You have the items - PERS GROUP have the solutions

Turbo-Line
High Precision
Get Robot handling on our machines

›-Line 50GS

Model	Capacity (L)	Measurement LxHxB (mm)	Engine (kW)	Speed (RPM)	Gap opening (mm)	Total weight (kg)
Turbo-Line 50GS	50	1,020 x 860 x 1,600	2.3	400	0.1 - 2.0	180

Round vibratory
Curved Semi automatic vibratory with discharge - Model A

Model	Capacity (L)	Outside Diameter (mm)	Engine Installation (mm)	Bowl Inside measure (mm)	Discharge Sold (mm)	Height (mm)	Discharge Height (mm)	Height (mm)	Engine (kW)	Total Weight (kg)
Vibra-Line 100A	100	900	470	220	250	880	760	290	1.5	280
Vibra-line 200A	200	1,060	530	252	266	940	780	360	3.0	460
Vibra-Line 300A	260	1,286	630	264	287	920	760	260	3.7	600
Vibra-Line 600A	580	1,800	900	390	430	1,200	960	410	5.5	1,500
Vibra-Line 900A	820	2,100	445	445	450	1,500	1,220	550	11.0	2,470

Round vibratory
U Shape Semi automatic vibratory with discharge - Model B

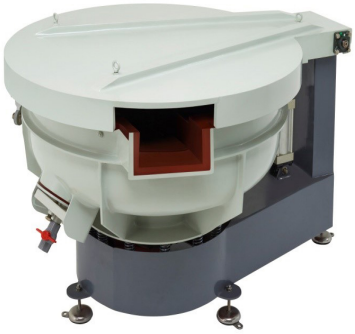

General process description:

Vibra-Line "Model B" is a round vibrator with from 100-660 L. bowl and with an integrated noise reduction lid. The U-shaped bowl has vertical straight sides and an automatic pneumatic operated discharge output where the workpieces come out automatically when the discharge flap is activated. The machine is coated with 20-24 mm. yellow PU (Polyurethane) coating. The work bowl itself can with its 100 - 660 L. capacity take approx. 50 -100 L. subjects per charge depending on the shape and size of the individual parts.
The basic model of any of our "Vibra-Line B models" are equipped with a control cabinet that includes a manual timer as well as a start and stop switch. (This means that a basic vibration unit vibrates at the same speed at all times during operation and discharge.) However, a frequency converter can be added as an option to all "Vibra-Line" machines. All the machine is delivered CE approved.

Model	Capacity (L)	Outside Diameter (mm)	Engine Installation (mm)	Bowl Inside measure (mm)	Discharge Sold (mm)	Height (mm)	Discharge Height (kmm	Height (mm)	Engi-ne (kW)	Total weight (kg)
Vibra-Line 100B	100	1,080	460	220	250	980	800	470	1.5	280
Vibra-Line 150B	150	1,170	460	260	210	860	710	440	2.2	320
Vibra-Line 200B	200	1,200	530	252	250	940	770	360	3.0	460
Vibra-Line 300B	270	1,370	630	275	320	960	760	290	3.7	650
Vibra-Line 400B	480	1,430	630	330	380	1,270	1,090	570	5.0	780
Vibra-Line 600B	660	1,860	900	390	470	1,140	925	400	7.5	1,180

Round vibratory
Shaped bowl - Model A

Model	Outside Diameter (mm)	Engine Installation (mm)	Bowl Inside (mm)	Discharge Sold (mm)	Height (mm)	Engine (kW)	Total Weight (kg)
Vibra-Line A30M	640	130	185	225	810	0.5	10
Vibra-Line A80M	830	226	224	270	920	0.75	120
Vibra-Line A100M	1,020	470	220	330	860	1.5	260
Vibra-Line A200M	1,200	540	220	343	900	3.0	400
Vibra-Line A300M	1,310	620	280	365	900	3.7	560
Vibra-Line A600M	1,820	910	380	500	1,350	5.5	1,080
Vibra-Line A900M	1,930	610	560	490	1,330	9.0	1,850
Vibra-Line A1200M	2,020	740	560	645	1,420	11.0	2,400

Round vibratory shaped bowl - Model B
Manuel discharge

Vibra-Line B100M -B2500M is with noise enclosing lid

Model	Capacity (L)	Outside Diameter (mm)	Engine Installation (mm)	Bowl Inside (mm)	Discharge Sold (mm)	Height (mm)	Engine (kW)	Total Weight (kg)
Vibra-Line B60M	63	830	114	280	245	910	1.1	110
Vibra-Line B100M	100	1,020	470	216	330	860	2.2	260
Vibra-Line B200M	220	1,200	625	220	385	915	3.0	420
Vibra-Line B300M	250	1,310	620	270	390	900	3.7	600
Vibra-Line B400M	400	1,410	633	320	450	1,040	5.0	850
Vibra-Line B600M	660	1,820	910	370	490	1,140	7.5	1,100
Vibra-Line AB00M	920	1,930	610	560	510	1,350	9.0	1,850
Vibra-Line B1200M	1,300	1,930	610	560	575	1,350	11.0	2,200
Vibra-Line B1500N	1,500	2,120	690	630	630	1,420	15.0	2,400
Vibra-Line B2500M	2,500	2,300	850	650	850	1,350	18.5	3,000

Round vibratory
with reverse discharging system - Model BC

Vibra-Line 200BC

Model	Capacity (L)	Machine Height (mm)	Installation area (mm)	Engine (kW)	Total Weight (kg)
Vibra-Line 200BC	200	1,100	1,205 x 1,070	3.0	400

Vibra-Line 170 - Spiral Tube vibrator

Model	Capacity (L)	Machine Height (mm)	Installation area (mm)	Engine (kW)	Total Weight (kg)
Vibra-Line 170	170	1,300	1,450 x 1,450	5.5	180

Round vibratory
Shaped bowl without discharge - Model C

Model	Capacity (L)	Outside Diameter (mm)	Bowl Inside (mm)	Machine Height (mm)	Engine (kW)	Total Weight (kg)
Vibra-Line C450	480	1,430	380	1,060	5.0	720
Vibra-Line C800	800	1,850	480	860	2.2	260

Separation system

A vibration treatment is only successful when the separation process is perfect. The chips & compound must be completely separate from the workpieces.

This is done via a separation sieve, where the chips & compound falls through the holes in the sieve and workpieces are led straight out of the vibration table.

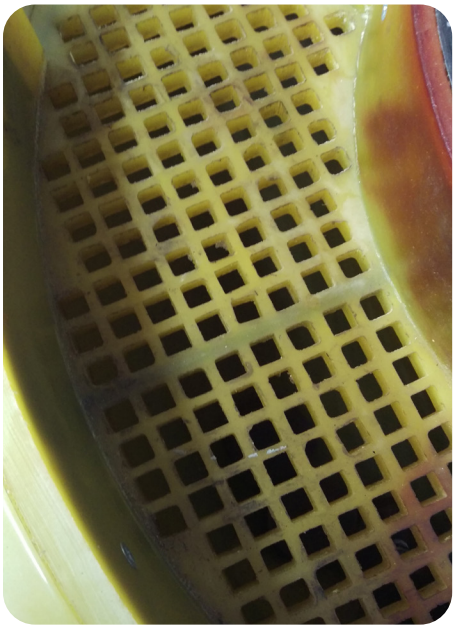

Standard discharge screen made of PU with square holes 20 x 20 mm., can be adjusted with jigsaw to items and media as required. Other size sieves can be required but will then be offered as an optional part.

The separation strainer can be made of polyethylene or wire grid. Depending on the type of separation type of machines, the separation sieve is maintained in place with wedges or clamping screws enabling the sieve to be replaced without problems when/if required.

The separation flap is supported by the transition edge of the slope area.

- Mechanical activation is done by means of a pneumatic cylinder
- Operation is done by moving a flap-activation pin on the control cabinet which over a solenoid valve will operate the separation flap.

The workpieces are being moved up through the slope area onto the horizontal area over the sieve and out of the vibrator machine. The chips fall through the sieve and remain in the "Vibra-Line" machine.

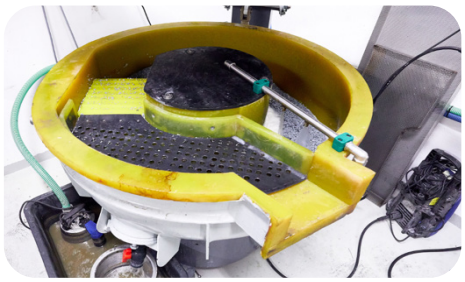

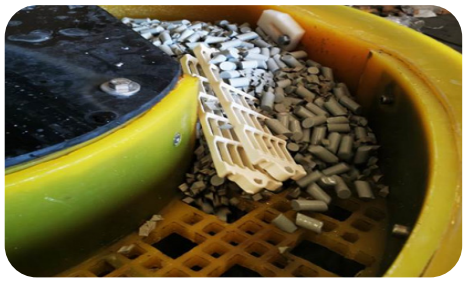

Control Panel

The circular vibrations machines are used in many different areas.

Therefore, the electronic control system is normally always tailored to the respective requirements.

In close and accordance with the dosing system, all system functions can be conveniently controlled and monitored.

The basic model of "Vibra-Line" is equipped with a control cabinet that incl. a manual timer as well as a start and a stop switch.
This means that the circular vibrator at any time runs with the same speed. This is the case during both operation and discharging of the work pieces

As an option, a control cabinet with frequency converter and "Touch panel" can be selected for controlling the Vibra-Line machine, where both the speed of the circular vibration and the speed of how fast the workpieces should come out can be adjusted.
Furthermore, the required vibration time/cycle can be adjusted.

Setting the working time Start/Stop/Emergency stop
See operating hours

Corn dryer

General process description:

Round working container with heated bottom and pneumatic flap which can be activated when you want the work pieces to exit the corn dryer.

Drying and polishing is typically done with crushed corn and gives an immaculate and shiny surface.
The rotary dryer is filled with approx. 15% crushed corn of the size of the corn dryer.

The wet items are usually fed automatically and directly from a rotary vibrator or a high-rotation machine (Turbo-Line) into the maize dryer, where the work pieces can run just one round in the corn dryer or until the built-in pneumatic discharge screen is activated via the discharge button on the control cabinet.

The maize dryer itself is automatically temperature controlled (PT 100 sensors) via an electronic heat control. The corn is heated with 6 pcs. indirect heaters located under the process bowl. This contributes to an efficient heat distribution without directly burning the corn granules off. The actual heat control is done by setting a given operating temperature. After this, the electronics themselves will regulate the heating effect according to requirement. When there is a charge of items in the dryer, the heat demand will increase. This is registered and the heat output rises/turns on. When items and the corn have reached the set temperature, the heating effect will be steplessly regulated down. By controlling the corn dryer in this way, the temperature never gets higher than the pre-set value and therefore the corn is never burned off.

By controlling the heating process this way, this heating method differs significantly from other maize dryers and is therefore significantly inexpensive to operate.
Inside and outside, the maize dryer is coated on the vertical sides with a durable 2-Component PU (Polyurethane) or rubber coating.

Model	Capacity (L)	Measurement (ØxH)	Bowl Inside (mm)	Heater Effect (kW)	Discharge Height (mm)	Engine (kW)	Total Weight (kg)
Vibra-Dry 200A Simpel model on/off	200	1,200 x 905	320	1.5 x 6	700	1.5	550
Vibra-Dry 200 WT	200	1,200 x 905	320	1.5 x 6	700	1.5	550
Vibra-Dry 600A Simpel model on/off	600	1,560 x 1,030	400	2.2 x 6	820	1.5	900
Vibra-Dry 600 WT	600	1,560 x 1,030	400	2.2 x 6	820	1.5	900
Vibra-Dry 600GT		1,700 x 2.250	600	3 x 6	1.250	0,75	1.200

Linear type vibratory machine
U Shaped

PERS

You have the items - PERS GROUP have the solutions

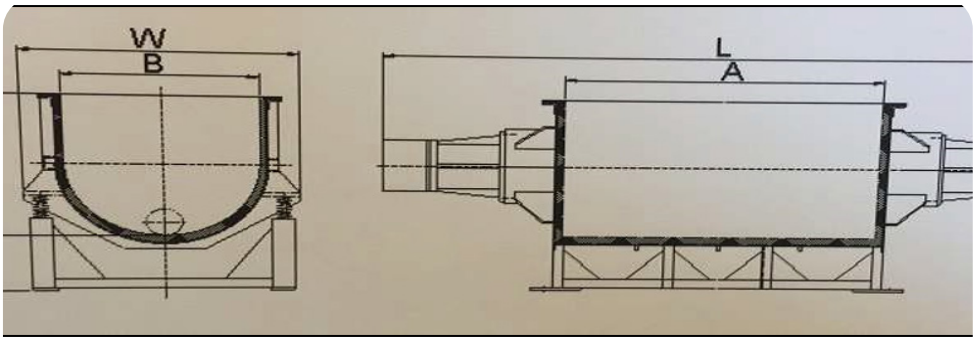

Model	Capacity (L)	Measurement L x W x H (mm)	Camber Lenght (mm)	Camber Height (mm)	Camber Width (mm)	Engine (kW)	Total Weight (kg)
Vibra-Trough 15	15	565 x 330 x 670	440	225	200	0.37	60
Vibra-Trough 145	145	760 x 715 x 1,180	600	490	500	1.5	125
Vibra-Trough 250	250						680
Vibra-Trough 500	500	2,670 x 1,000 x 985	1,310	700	690	2.2 x 2	700
Vibra-Trough 750	750	2,700 x 1,050 x 1,100	1,809	675	690	4.0 x 2	1,200
Vibra-Trough 900	900	3,212 x 1,407 x 1,201	1,200	850	900	4.0 x 2	1,500
Vibra-Trough 1.200	1.200	3,000 x 1,050 x 1,100	2,000	850	750	4.0 x 2	2,100
Vibra-Trough 1.800	1.800	3,500 x 1,336 x 1,256	2,000	940	1,120	5.5 x 2	2,800
Vibra-Trough 2.800	2.800	3,300 x 1,830 x 1,740	1,580	1,270	1,500	9.0 x2	4,000

Magnetic separator
T-Model

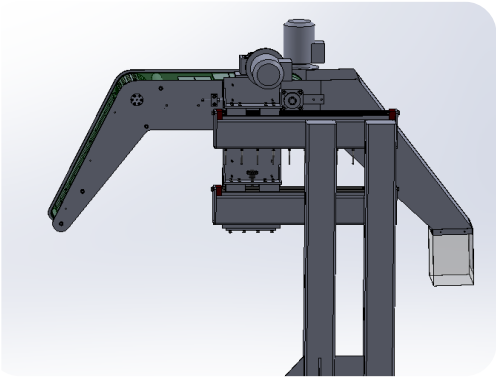

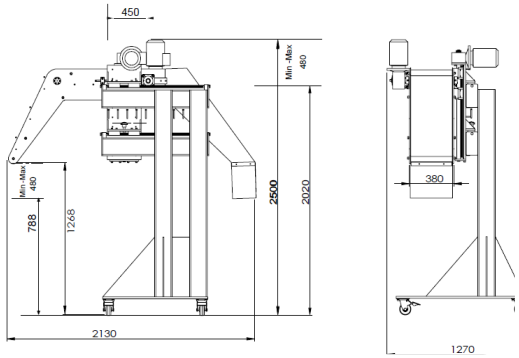

PERS

You have the items - PERS GROUP have the solutions

Magnetic Separator
L-Model

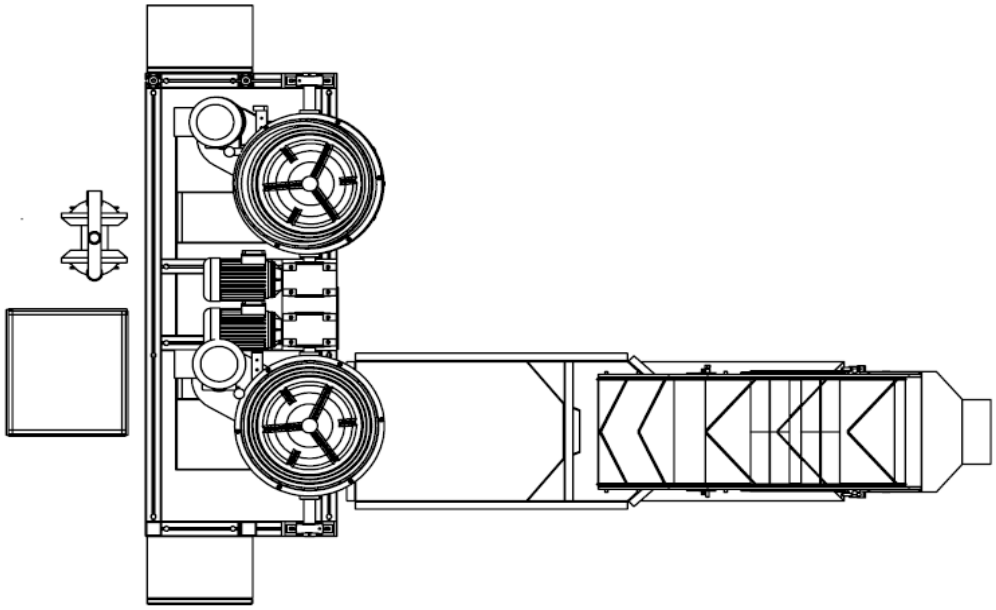

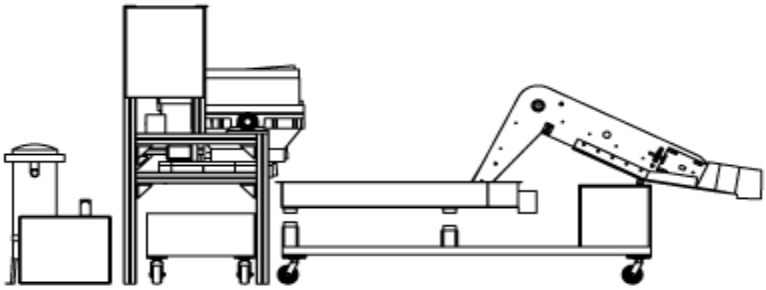

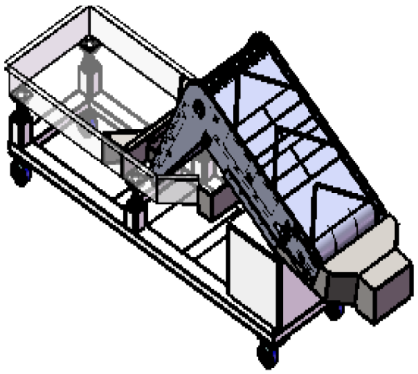

Model	Elektric Model	Measurement L x W x H (mm)	Transmissions Speed	Suction Height (mm)	De-magnetics ion Unit	Engine (kW)	Total Weight (kg)
L-480	200x480	2,440x500x1,095	0.5M/S	480	TC-2AC-220V	0.55	410
L-430	130x430	1,200x920x1,600	0.5M/S	450	TC-2AC-220V	0.75	480

Vibra-Sep
Vibratory table

Discharge table Vibra-Sep low model for separating items from media/compound.
Under the discharge table there are 2 pcs. of 0.25 kW motors mounted, which provide the actual vibration.
Options as washing stations and/or drying section can be built onto the separation table if the required space is available
Vibra-Sep 1100 Hxxx is high model for Vibra-Dry and Turbo-Line 120 and Turbo-Line 120B

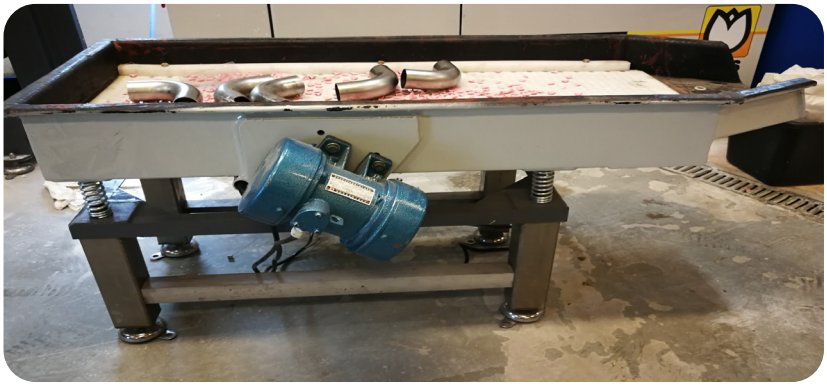

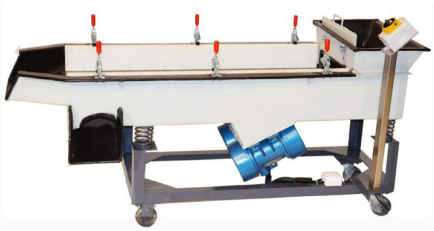

PERS

You have the items - PERS GROUP have the solutions

Vibra-Sep 1100 universal bord

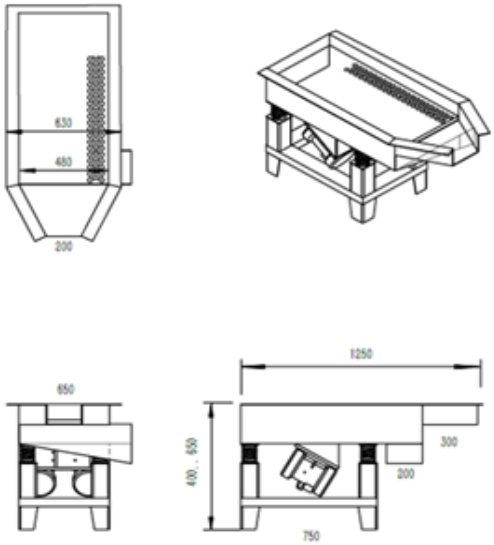

Vibra-Sep 1300

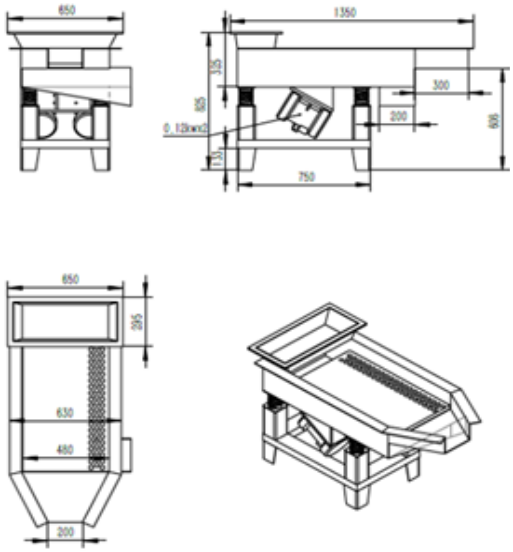

Vibra-Sep 1700

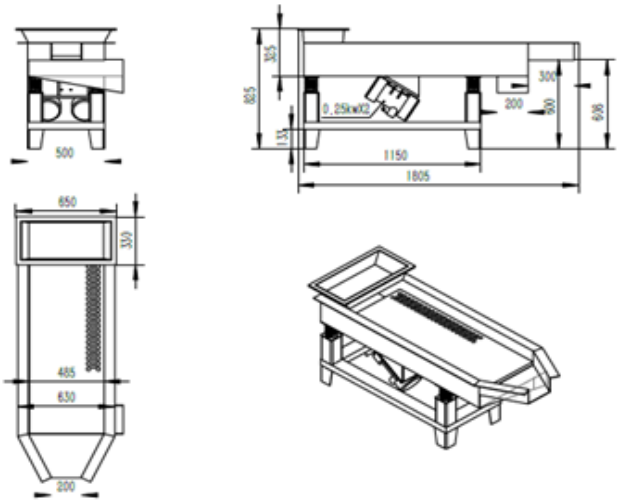

Vibra-Sep 2200

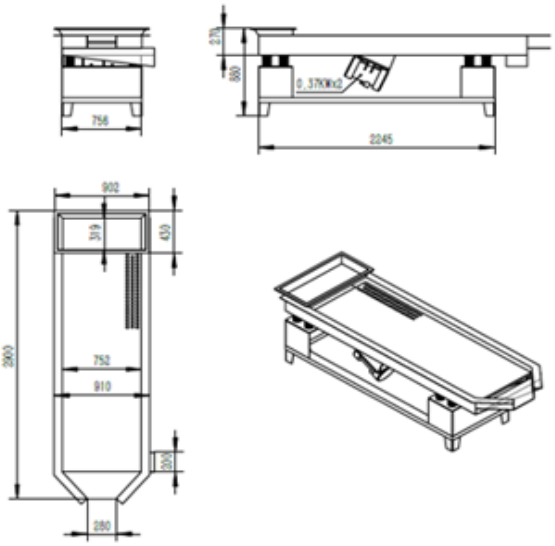

Vibratory separator table Vibra-Sep 1100 L490 For Turbo-Line 120B

Vibratory separator table Vibra-Sep 1300

Vibratory separator table Vibra-Sep 1700

Vibratory separator table Vibra-Sep 2200

Vibratory separator table Vibra-Sep 1100 H 670 for Vibra-dry

Vibratory separator table Vibra-Sep 1100 H 630 for Turbo-Line 120

Vibratory separator table Vibra-Sep 1100 H 710 for Vibra-Line 150

Vibratory separator table Vibra-Sep 1100 H 750 for Vibra-Line 300

Sewage systems
Filter press

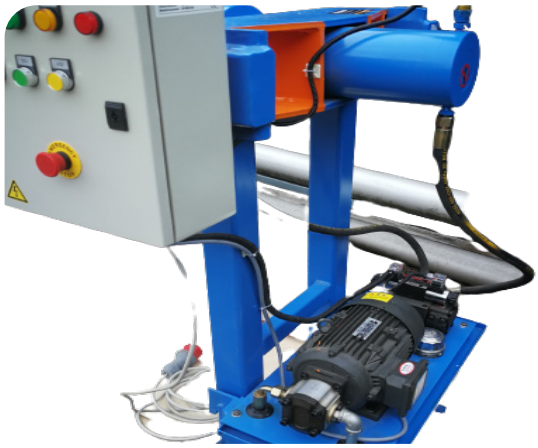

A hydraulic filter press is a piece of equipment used to extract solids from the waste water/compound. The filter press separates the liquids and solids using the pressure filtration where the sewage water/liquid is pumped into the filter press and is dewatered under pressure. Thus, only the solids is being held back in the filter press and the clean compound can be reused.

Filter presses are used for liquid/solids separation in an extensive range of industries and applications, from food and beverage processing to chemical manufacturing, mining, power generation, aggregates, asphalt and cement production, steel mills and municipal plants.

Filter press 60 L.

Filter press 151 L.

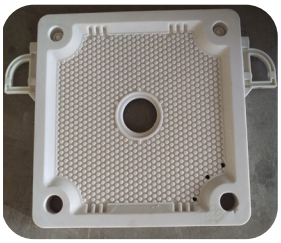

Dosing pump w/solenoid and ball valve

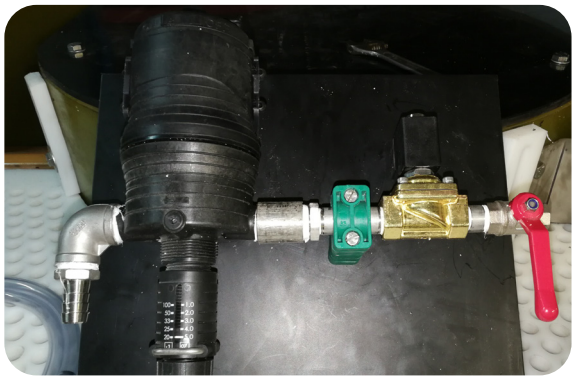

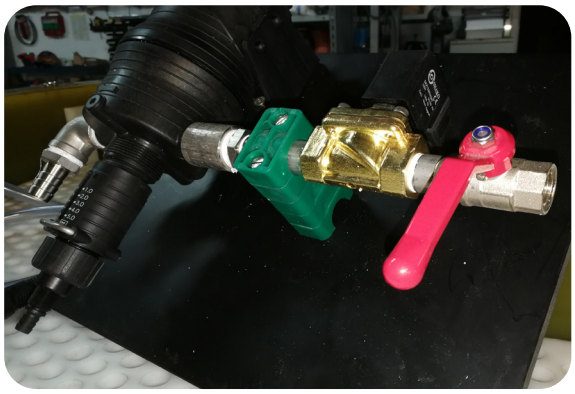

Dosing pump with solenoid and ball valve
The dosing unit for automatically adding compound to water in a certain percentage (normally between 1% and 5%.) The fresh water and compound is mixed and then added to the system as required.

Feeding pump

Peristaltic pump

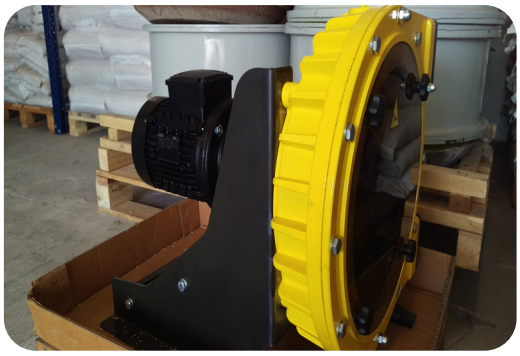

The peristaltic pump which Pers Group recommend is running with an average of 42 rpm @ 50 Hz and pumps 200 L./h. The pump is a 0,55 kW and requires 3 x 400 V AC. The protection class is IP55. The peristaltic pump has the following measurements: L x W x H: 700 x 600 x 500 mm. and is supplied on 4 pieces of stainless-steel machine feet.

NOTE: All other pump types will stall due to the amount of sludge in the waste water which the pump has to pump.

ADVANTAGE:

- No mechanical seals or fillings
- Robust box
- Dosing of very corrosive chemicals, aggressive or viscose products
- Fully self-priming up to 9.8 m.
- Damage-free continuously dry running
- Outlet pressure up to 15 Bar
- Very easy to service
- Robust ball bearings – greased for life
- 2 years warranty

PE-tank in built-in rack
with centrifugal feeding pump and level sensor

PE tank with cone bottom for removing coarse sludge from process water and with 2 ”drain tap for sludge fitted with stainless inlet and outlet pipes.
The tank is mounted on a epoxy painted stand, on which also 1 or 2 centrifugal pump with string switch for supplying liquid to the machines are mounted.
Furthermore, a ventilation system will be fitted, as well as a return flow to the tank which will be atomized through a nozzle, during operation, to aerate stagnant water in the tank itself.

Model	Measurement Ø x H (mm)
1,100 L.	1,150 x 2,000

Buffer tank

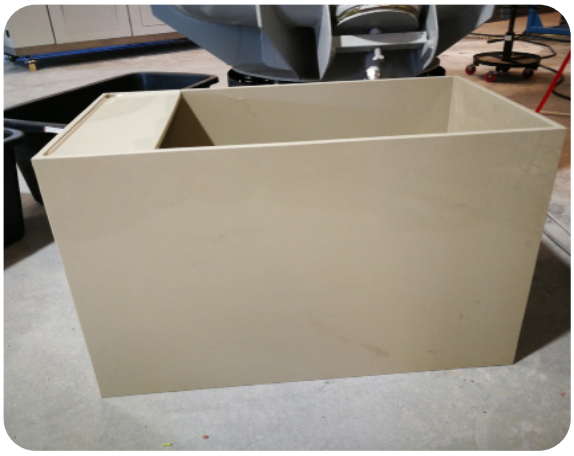

90 L. Buffer tank with filter basket and pump

To handle the compound fluid a buffer tank (made of plastic) is required, before being pumping the compound into a tank/container from where the compound either is being pumped to a big tank and through a filter press to remove the sludge or directly into the chips and work pieces again.
The buffer tank has a filter inserts and a submersible pump is included. Furthermore, by adding a centrifugal pump & a hose you will be able to return the compound fluid into an additional buffer tank or directly into the chips during operation.

Model	Measurement L x W x H (mm)
90 L.	700 x 400 x450
240 L.	600 x 500 x800

You have the items.

we have the solutions!

Our location and Test Center

If you have any questions, please contact our customer support department

Area sales manager

Jens Brietzke

+45 2819 2874

jens@pers-group.com

Test center

Torben Pers

+45 2819 2875

torben@pers-group.com